HYBRID®

www.hybriddentalimplant.com

HYBRID IMPLANT

"Confidence in Stability"

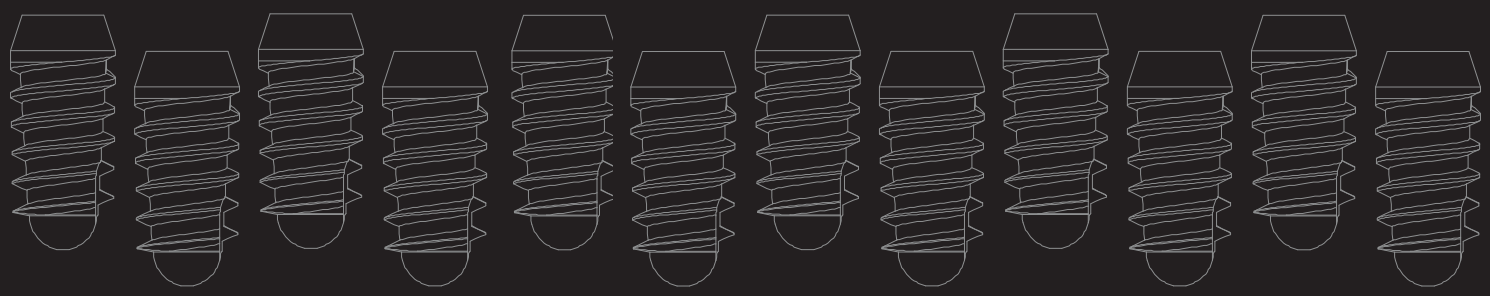

HYBRID IMPLANT

www.hybriddentalimplant.com

"To improve is to change; to be perfect is to change often"

Winston Churchill

Confidence in Stability!

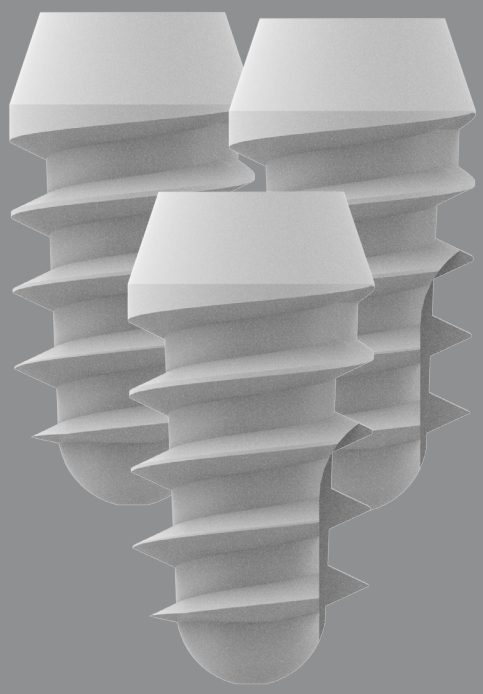

Hybrid implant

8 PAGE — IMPLANT

12 PAGE — ABUTMENT 360° FLEXIBLE POSITIONING

20 PAGE — INDEX ABUTMENT

26 PAGE — SURGICAL KIT

NTA IMPLANT COMPANY GROUP

Our company is engaged in providing solutions in implant dentistry by offering highest quality of dental implants. Development, manufacturing process, marketing, publicity, and trademark rights of all the products are legal and belong to our company. The products are being developed using state of the art technologies under the light of the up-to-date scientific data in the field of implantology.

We manufacture "Screw-type" and "Press-fit" implants with their accessories under the brands of Nta Implant, Nta Shorter Implant, Nta Shorter Plus Implant and Hybrid Implant. The Quality System Management Certificates belonging to us are FDA, CE, ISO 9001:2015, ISO 13485:2012 and ISO 10002:2004.

Our Solution Partners in SWITZERLAND, S.KOREA, USA and FRANCE carry out research and development, production and surface treatment for the products in their own countries. Some of our partners have more than 35 years of experience in dental market.

OUR MISSION is always to produce the most impressive products with wide product range for all dental implant indications by using effective, reliable and safe treatment methods without compromising the highest quality.

OUR VISION is to combine up-to-date developments in research and innovations in science and offer highest quality products to our customers.

Our Quality Certifications of Management System

ISO 9001:2015 **ISO 13485:2012** **ISO 10002:2004** FDA CE 1984

1.5° Locking Taper

1.5 Locking taper connection provides bacterial seal at the implant-abutment interface and Hybrid's bacterial seal avoids the microleakage issues.

Sloping Shoulder

Hybrid's sloping shoulder affords flexibility at the time of implant placement and provides space for impressive bone maintenance.

Simple & Easy

Simple connection guarantees an easy prosthetic procedure.

Cost - Effective

The highest technology which is the secret of success is provided cost effectively.

HYBRID IMPLANT

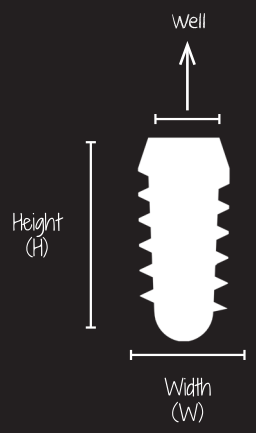

2.0 mm Well →	3.0x8 / 3.0x10 / 3.0x12 3.5x8 / 3.5x10 / 3.5x12
2.5 mm Well →	4.0x8 / 4.0x10 / 4.0x12
3.0 mm Well →	4.5x8 / 4.5x10 / 4.5x12 5.0x8 / 5.0x10 / 5.0x12

1.5 Locking Taper Abutment
Index Or Non-Index (360° Flexible Positioning)

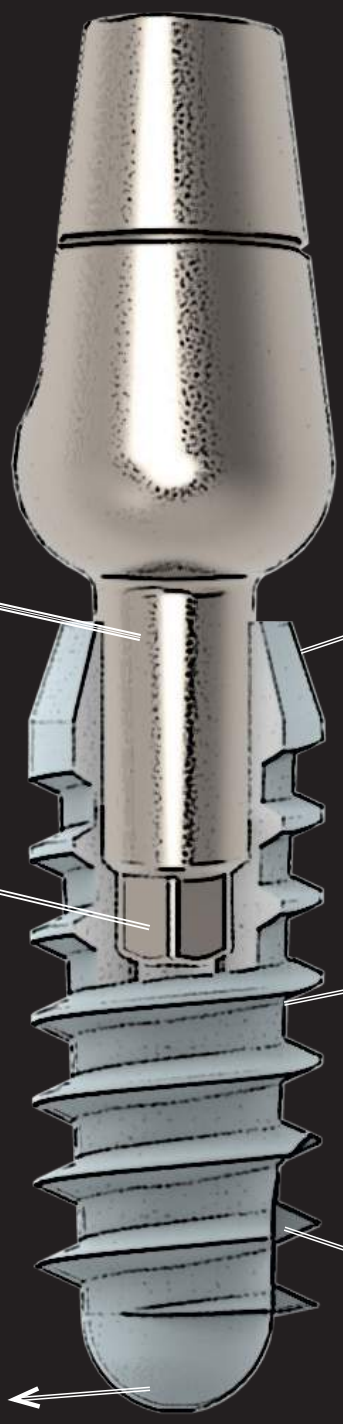

1.5° Locking Taper

1.5 Locking taper connection provides bacterial seal at the implant-abutment interface and Hybrid's bacterial seal avoids the microleakage issues.

Sloping Shoulder

Hybrid's sloping shoulder affords flexibility at the time of implant placement and provides space for impressive bone maintenance.

! INDEX OR NON-INDEX *and* NON SCREW

Hight Stability Threads

Superior self-threading
Ensures implant path
Easy path change
High primary stability
Even stress distribution
Decrease sensitivity on drill size

Round Apex

The rounded apex may reduce the risk of tissue damage, especially when placing the implant into maxillary sinus sites.

Cutting Edge

Superior self-threading
Easy path change

Hybrid Implant

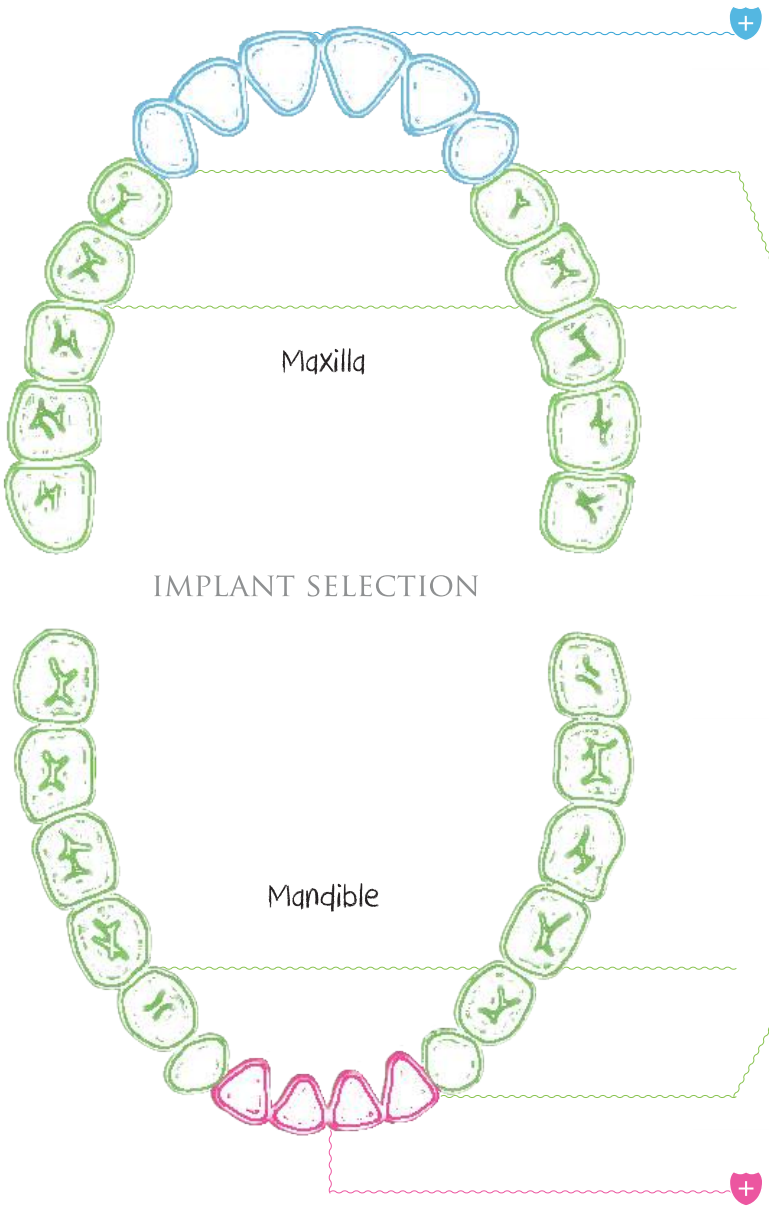

2.5 mm Well

4.0x8 / 4.0x10 / 4.0x12

3.0 mm Well

4.5x8 / 4.5x10 / 4.5x12
5.0x8 / 5.0x10 / 5.0x12

2.0 mm Well

3.0x8 / 3.0x10 / 3.0x12
3.5x8 / 3.5x10 / 3.5x12

Implantation Position

Key Point; to get a succesful long term result, the placement of the implant at least 3 mm below the soft tissue margin is strongly recommended.

Surface Treatment

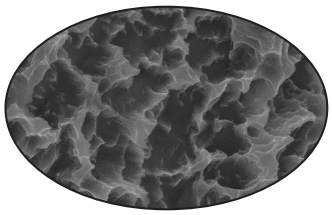

SLA surface is not a coating surface. Macro roughness is created by spraying large sand particles onto the implant. Macro roughness is created by blasting large sand particles on to the implant. Applying the acid to the surface gives 2-4 µm micro-pits. SLA implant surfaces are intermediate rough surfaces. The roughness grade is the same along the implant surface.

Hybrid Implant

2.0 mm Well

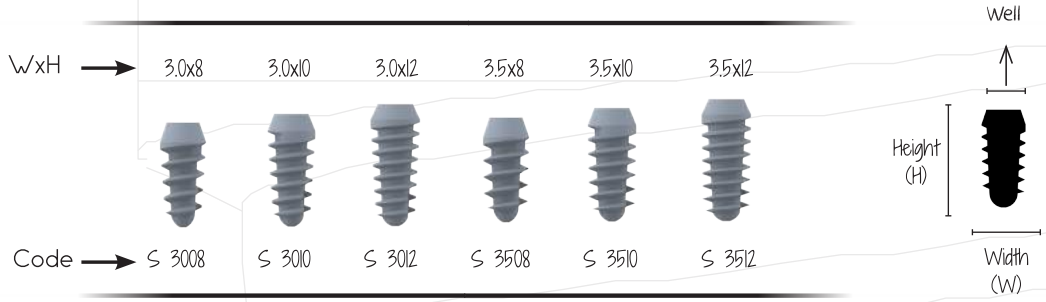

2.5 mm Well

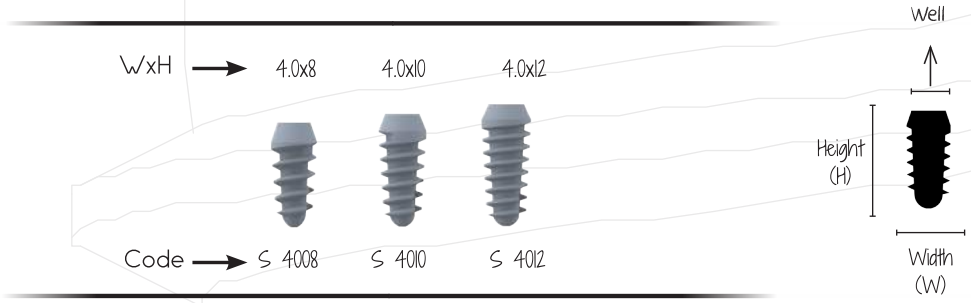

3.0 mm Well

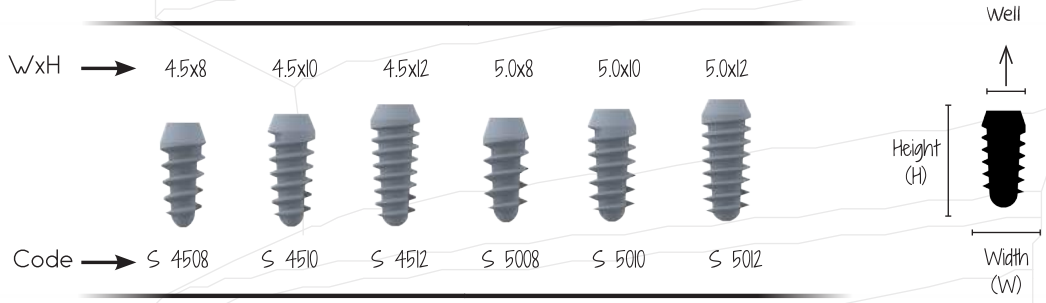

1.5° LOCKING TAPER

NON - INDEX

Non Screw

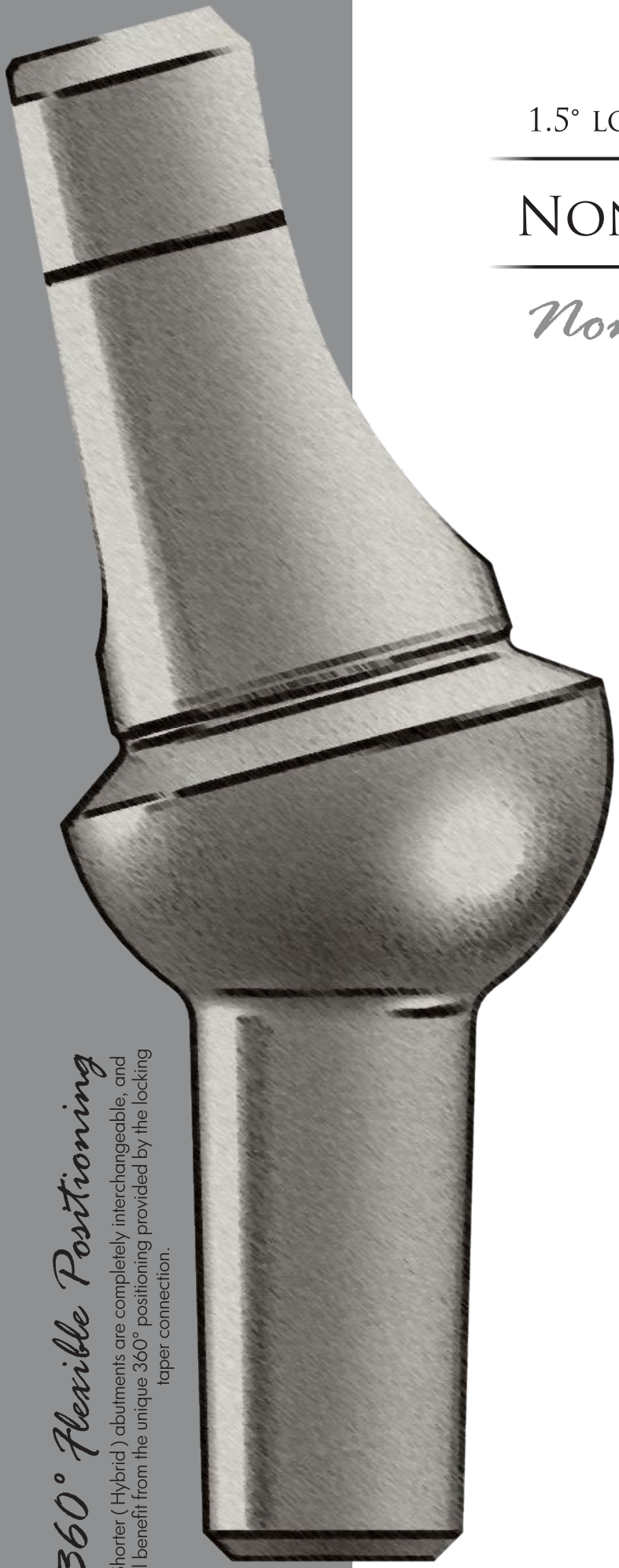

360° Flexible Positioning

Shorter (Hybrid) abutments are completely interchangeable, and all benefit from the unique 360° positioning provided by the locking taper connection.

360° Flexible Positioning

Abutments

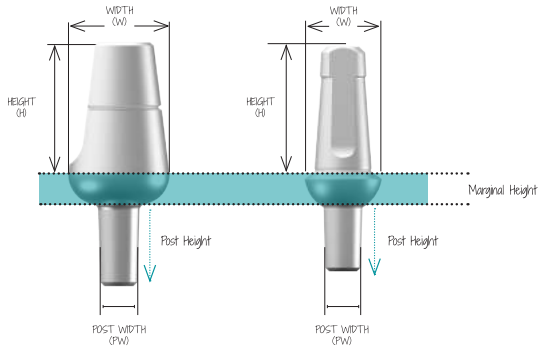

Abutments PL Gauge

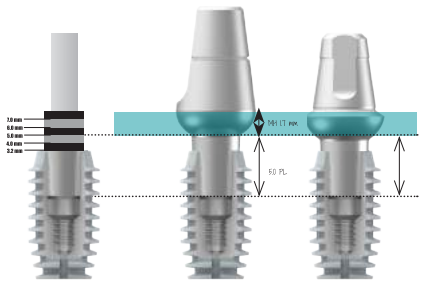

3 mm Post (PL5.0) 5 x 6.5 / 0°

Shorter (Hybrid) abutments have 4 different margin heights (MH) which depends on the width of the abutment. 4 different margin heights are as follows:

W = 3.5 mm, MH = 1.0 mm
W = 4.0 mm, MH = 1.5 mm
W = 5.0 mm, MH = 1.7 mm
W = 6.5 mm, MH = 3.0 mm

2.0 POST SHOULDERED ABUTMENT

unit (mm)

CODE	PL	D °	W x H
235 - 650S	4.0	0 °	3.5 x 6.5
240 - 500S	4.0	0 °	4.0 x 5.0
240 - 650S	4.0	0 °	4.0 x 6.5
250 - 500S	4.0	0 °	5.0 x 5.0
250 - 650S	4.0	0 °	5.0 x 6.5

CODE	PL	D °	W x H
235 - 651S	4.0	15°	3.5 x 6.5
240 - 501S	4.0	15°	4.0 x 5.0
240 - 651S	4.0	15°	4.0 x 6.5
250 - 501S	4.0	15°	5.0 x 5.0
250 - 651S	4.0	15°	5.0 x 6.5

CODE	PL	D °	W x H
240 - 6502S	3.2	0 °	4.0 x 6.5
250 - 6502S	3.2	0 °	5.0 x 6.5

CODE	PL	D °	W x H
240 - 6512S	3.2	15°	4.0 x 6.5
250 - 6512S	3.2	15°	5.0 x 6.5

CODE	PL	D °	W x H
235 - 6505S	5.0	0 °	3.5 x 6.5
240 - 6505S	5.0	0 °	4.0 x 6.5
250 - 5005S	5.0	0 °	5.0 x 5.0
250 - 6505S	5.0	0 °	5.0 x 6.5

CODE	PL	D °	W x H
235 - 6515S	5.0	15°	3.5 x 6.5
240 - 6515S	5.0	15°	4.0 x 6.5
250 - 5015S	5.0	15°	5.0 x 5.0
250 - 6515S	5.0	15°	5.0 x 6.5

CODE	PL	D °	W x H
240 - 6506S	6.0	0 °	4.0 x 6.5
250 - 6506S	6.0	0 °	5.0 x 6.5

CODE	PL	D °	W x H
240 - 6516S	6.0	15°	4.0 x 6.5
250 - 6516S	6.0	15°	5.0 x 6.5

Material : Titanium Alloy (Ti-6Al-4V,ASTM F136).

Characteristics : Available in various sizes and 360° of universal positioning.

2.0 POST NON-SHOULDERED ABUTMENT

unit (mm)

CODE	PL	D °	W x H
230 - 650	4.0	0 °	3.0 x 6.5
235 - 650	4.0	0 °	3.5 x 6.5
240 - 650	4.0	0 °	4.0 x 6.5
240 - 800	4.0	0 °	4.0 x 8.0
240 - 100	4.0	0 °	4.0 x 10
250 - 500	4.0	0 °	5.0 x 5.0
250 - 650	4.0	0 °	5.0 x 6.5
250 - 800	4.0	0 °	5.0 x 8.0
250 - 100	4.0	0 °	5.0 x 10
265 - 650	4.0	0 °	6.5 x 6.5
265 - 800	4.0	0 °	6.5 x 8.0

CODE	PL	D °	W x H
230 - 651	4.0	15°	3.0 x 6.5
235 - 651	4.0	15°	3.5 x 6.5
240 - 651	4.0	15°	4.0 x 6.5
240 - 801	4.0	15°	4.0 x 8.0
240 - 101	4.0	15°	4.0 x 10
250 - 651	4.0	15°	5.0 x 6.5
250 - 801	4.0	15°	5.0 x 8.0
250 - 101	4.0	15°	5.0 x 10
265 - 651	4.0	15°	6.5 x 6.5
265 - 801	4.0	15°	6.5 x 8.0

CODE	PL	D °	W x H
230 - 652	4.0	25°	3.0 x 6.5
240 - 652	4.0	25°	4.0 x 6.5
250 - 652	4.0	25°	5.0 x 6.5

CODE	PL	D °	W x H
240 - 6502	3.2	0 °	4.0 x 6.5

CODE	PL	D °	W x H
240- 6512	3.2	15°	4.0 x 6.5

CODE	PL	D °	W x H
240- 6505	5.0	0 °	4.0 x 6.5
250 - 6505	5.0	0 °	5.0 x 6.5

CODE	PL	D °	W x H
240 - 6515	5.0	15°	4.0 x 6.5
240 - 1015	5.0	15°	4.0 x 10
250 - 6515	5.0	15°	5.0 x 6.5

CODE	PL	D °	W x H
250- 6506	6.0	0 °	5.0 x 6.5

CODE	PL	D °	W x H
250- 6516	6.0	15°	5.0 x 6.5

Material : Titanium Alloy (Ti-6Al-4V,ASTM F136).
Characteristics : Available in various sizes and 360° of universal positioning.

2.5 POST SHOULDERED ABUTMENT

unit (mm)

CODE	PL	D °	W x H
540 - 650S	4.0	0 °	4.0 x 6.5
540 - 100S	4.0	0 °	4.0 x 10
550 - 650S	4.0	0 °	5.0 x 6.5

CODE	PL	D °	W x H
540 - 651S	4.0	15°	4.0 x 6.5
540 - 801S	4.0	15°	4.0 x 8.0
550 - 651S	4.0	15°	5.0 x 6.5

CODE	PL	D °	W x H
550-6502S	3.2	0°	5.0 x 6.5

CODE	PL	D °	W x H
550-652S	4.0	25°	5.0 x 6.5
550-6512S	3.2	15°	5.0 x 6.5

CODE	PL	D °	W x H
540 - 6505S	5.0	0 °	4.0 x 6.5
540 - 1005S	5.0	0 °	4.0 x 10
550 - 6505S	5.0	0 °	5.0 x 6.5

CODE	PL	D °	W x H
540 - 6515S	5.0	15°	4.0 x 6.5
540 - 8015S	5.0	15°	4.0 x 8.0
550 - 6515S	5.0	15°	5.0 x 6.5

CODE	PL	D °	W x H
540 - 6506S	6.0	0 °	4.0 x 6.5
540 - 1006S	6.0	0 °	4.0 x 10
550 - 6506S	6.0	0 °	5.0 x 6.5

CODE	PL	D °	W x H
540 - 6516S	6.0	15°	4.0 x 6.5
540 - 8016S	6.0	15°	4.0 x 8.0
550 - 6516S	6.0	15°	5.0 x 6.5

Material : Titanium Alloy (Ti-6Al-4V,ASTM F136).
Characteristics : Available in various sizes and 360° of universal positioning.

2.5 POST NON-SHOULDERED ABUTMENT

unit (mm)

CODE	PL	D °	W x H
540 - 650	4.0	0 °	4.0 x 6.5
540 - 100	4.0	0 °	4.0 x 10
550 - 650	4.0	0 °	5.0 x 6.5

CODE	PL	D °	W x H
540 - 651	4.0	15°	4.0 x 6.5
540 - 101	4.0	15°	4.0 x 10
550 - 651	4.0	15°	5.0 x 6.5

CODE	PL	D °	W x H
550-6502	3.2	0°	5.0 x 6.5

CODE	PL	D °	W x H
550-652	4.0	25°	5.0 x 6.5
550-6512	3.2	15°	5.0 x 6.5

CODE	PL	D °	W x H
540 - 6505	5.0	0 °	4.0 x 6.5
540 - 1005	5.0	0 °	4.0 x 10
550 - 6505	5.0	0 °	5.0 x 6.5

CODE	PL	D °	W x H
540 - 6515	5.0	15°	4.0 x 6.5
540 - 1015	5.0	15°	4.0 x 10
550 - 6515	5.0	15°	5.0 x 6.5

CODE	PL	D °	W x H
540 - 6506	6.0	0 °	4.0 x 6.5
540 - 1006	6.0	0 °	4.0 x 10
550 - 6506	6.0	0 °	5.0 x 6.5

CODE	PL	D °	W x H
540 - 6516	6.0	15°	4.0 x 6.5
540 - 1016	6.0	15°	4.0 x 10
550 - 6516	6.0	15°	5.0 x 6.5

Material : Titanium Alloy (Ti-6Al-4V,ASTM F136).
Characteristics : Available in various sizes and 360° of universal positioning.

3.0 POST SHOULDERED ABUTMENT

unit (mm)

CODE	PL	D °	W x H
340 - 500S	4.0	0 °	4.0 x 5.0
340 - 650S	4.0	0 °	4.0 x 6.5
350 - 500S	4.0	0 °	5.0 x 5.0
350 - 650S	4.0	0 °	5.0 x 6.5
365- 500S	4.0	0 °	6.5 x 5.0
365- 650S	4.0	0 °	6.5 x 6.5

CODE	PL	D °	W x H
340 - 501S	4.0	15°	4.0 x 5.0
340 - 651S	4.0	15°	4.0 x 6.5
350 - 501S	4.0	15°	5.0 x 5.0
350 - 651S	4.0	15°	5.0 x 6.5
365- 501S	4.0	15°	6.5 x 5.0
365- 651S	4.0	15°	6.5 x 6.5

CODE	PL	D °	W x H
340 - 6502S	3.2	0 °	4.0 x 6.5
350 - 6502S	3.2	0 °	5.0 x 6.5
365 - 6502S	3.2	0 °	6.5 x 6.5

CODE	PL	D °	W x H
340 - 6512S	3.2	15°	4.0 x 6.5
350 - 6512S	3.2	15°	5.0 x 6.5
365 - 6512S	3.2	15°	6.5 x 6.5

CODE	PL	D °	W x H
340 - 6505S	5.0	0 °	4.0 x 6.5
350 - 6505S	5.0	0 °	5.0 x 6.5
365- 5005S	5.0	0 °	6.5 x 5.0
365- 6505S	5.0	0 °	6.5 x 6.5

CODE	PL	D °	W x H
340 - 6515S	5.0	15°	4.0 x 6.5
350 - 6515S	5.0	15°	5.0 x 6.5
365- 5015S	5.0	15°	6.5 x 5.0
365- 6515S	5.0	15°	6.5 x 6.5

CODE	PL	D °	W x H
350 - 6506S	6.0	0 °	5.0 x 6.5
365- 6506S	6.0	0 °	6.5 x 6.5

CODE	PL	D °	W x H
350 - 6516S	6.0	15°	5.0 x 6.5
365- 6516S	6.0	15°	6.5 x 6.5

CODE	PL	D °	W x H
350 - 6507S	7.0	0 °	5.0 x 6.5

CODE	PL	D °	W x H
350 - 6517S	7.0	15°	5.0 x 6.5

Material : Titanium Alloy (Ti-6Al-4V,ASTM F136).
Characteristics : Available in various sizes and 360° of universal positioning.

3.0 POST NON-SHOULDERED ABUTMENT

unit (mm)

CODE	PL	D °	W x H
340 - 650	4.0	0 °	4.0 x 6.5
350 - 500	4.0	0 °	5.0 x 5.0
350 - 650	4.0	0 °	5.0 x 6.5
350 - 800	4.0	0 °	5.0 x 8.0
365 - 500	4.0	0 °	6.5 x 5.0
365 - 650	4.0	0 °	6.5 x 6.5
365 - 800	4.0	0 °	6.5 x 8.0
375 - 800	4.0	0 °	7.5 x 8.0

CODE	PL	D °	W x H
340 - 651	4.0	15°	4.0 x 6.5
350 - 651	4.0	15°	5.0 x 6.5
350 - 801	4.0	15°	5.0 x 8.0
365 - 651	4.0	15°	6.5 x 6.5
365 - 801	4.0	15°	6.5 x 8.0
375 - 801	4.0	15°	7.5 x 8.0

CODE	PL	D °	W x H
350 - 652	4.0	25°	5.0 x 6.5

CODE	PL	D °	W x H
350 - 6502	3.2	0 °	5.0 x 6.5
365- 6502	3.2	0 °	6.5 x 6.5

CODE	PL	D °	W x H
350 - 6512	3.2	15°	5.0 x 6.5
365 - 6512	3.2	15°	6.5 x 6.5

CODE	PL	D °	W x H
350 - 5005	5.0	0 °	5.0 x 5.0
350 - 6505	5.0	0 °	5.0 x 6.5
365 - 5005	5.0	0 °	6.5 x 5.0
365 - 6505	5.0	0 °	6.5 x 6.5

CODE	PL	D °	W x H
350 - 6515	5.0	15°	5.0 x 6.5
350 - 8015	5.0	15°	5.0 x 8.0
365 - 6515	5.0	15°	6.5 x 6.5

CODE	PL	D °	W x H
350 - 6506	6.0	0 °	5.0 x 6.5
365- 6506	6.0	0 °	6.5 x 6.5

CODE	PL	D °	W x H
350 - 6516	6.0	15°	5.0 x 6.5
365- 6516	6.0	15°	6.5 x 6.5

CODE	PL	D °	W x H
350 - 6507	7.0	0 °	5.0 x 6.5
365 - 6507	7.0	0 °	6.5 x 6.5

CODE	PL	D °	W x H
350 - 6517	7.0	15°	5.0 x 6.5
365 - 6517	7.0	15°	6.5 x 6.5

Material : Titanium Alloy (Ti-6Al-4V,ASTM F136).

Characteristics : Available in various sizes and 360° of universal positioning.

2.0 T-BASE ABUTMENT

unit (mm)

CODE	POST	PL
TB203	2.0	3.2
TB204	2.0	4.0

Material : Titanium Alloy (Ti-6Al-4V,ASTM F136)

Characteristics : Available in various sizes and 360° of universal positioning.

2.5 T-BASE ABUTMENT

unit (mm)

CODE	POST	PL
TB503	2.5	3.2
TB504	2.5	4.0

Material : Titanium Alloy (Ti-6Al-4V,ASTM F136)

Characteristics : Available in various sizes and 360° of universal positioning.

3.0 T-BASE ABUTMENT

unit (mm)

CODE	POST	PL
TB303	3.0	3.2
TB304	3.0	4.0

Material : Titanium Alloy (Ti-6Al-4V,ASTM F136)

Characteristics : Available in various sizes and 360° of universal positioning.

FIXED DETACHABLE ABUTMENT

unit (mm)

CODE	POST	PL	D °
FD230	2.0	3.2	0°
FD240	2.0	4.0	0°
FD250	2.0	5.0	0°

CODE	POST	PL	D °
FD231	2.0	3.2	15°
FD241	2.0	4.0	15°
FD251	2.0	5.0	15°

CODE	POST	PL	D °
FD530	2.5	3.2	0°
FD540	2.5	4.0	0°
FD550	2.5	5.0	0°

CODE	POST	PL	D °
FD531	2.5	3.2	15°
FD541	2.5	4.0	15°
FD551	2.5	5.0	15°

CODE	POST	PL	D °
FD330	3.0	3.2	0°
FD340	3.0	4.0	0°
FD350	3.0	5.0	0°

CODE	POST	PL	D °
FD331	3.0	3.2	15°
FD341	3.0	4.0	15°
FD351	3.0	5.0	15°

Material : Titanium Alloy (Ti-6Al-4V,ASTM F136)
Characteristics : Available in various sizes and 360° of universal positioning.

FIXED DETACHABLE - Cover Screw

CODE
80-06-01

FIXED DETACHABLE - Analog

CODE
80-06-02

FIXED DETACHABLE - Transfer and Castable Cop.

CODE
80-06-04

FIXED DETACHABLE - Transfer Coping + Retention Screw

CODE
80-06-03
80-06-06

FIXED DETACHABLE - Coping Screw

CODE	LENGHT
80-06-05	5mm
80-06-10	10 mm

O-RING ABUTMENT

unit (mm)

CODE	POST	PL	D °
50 - 20 - 20	2.0	2.0	0°
50 - 20 - 40	2.0	4.0	0°
50 - 20 - 60	2.0	6.0	0°

CODE	POST	PL	D °
50 - 20 - 21	2.0	2.0	15°
50 - 20 - 41	2.0	4.0	15°
50 - 20 - 61	2.0	6.0	15°

CODE	POST	PL	D °
50 - 25- 20	2.5	2.0	0°
50 - 25 - 40	2.5	4.0	0°
50 - 25 - 60	2.5	6.0	0°

CODE	POST	PL	D °
50 - 25 - 21	2.5	2.0	15°
50 - 25 - 41	2.5	4.0	15°
50 - 25 - 61	2.5	6.0	15°

CODE	POST	PL	D °
50 - 30 - 20	3.0	2.0	0°
50 - 30 - 40	3.0	4.0	0°
50 - 30 - 60	3.0	6.0	0°

CODE	POST	PL	D °
50 - 30 - 21	3.0	2.0	15°
50 - 30 - 41	3.0	4.0	15°
50 - 30 - 61	3.0	6.0	15°

Material : Titanium Alloy (Ti-6Al-4V,ASTM F136).
Characteristics : Abutment for overdenture.

O-RING HOUSING

CODE
05-01-01

RUBBER

CODE
05-01-02

2.0 POST S-LOC

CODE	CUFF	D °
SH201	1	0°
SH202	2	0°
SH203	3	0°
SH204	4	0°
SH205	5	0°
SH206	6	0°
SH201515	1.5	15°
SH201530	3.0	15°

2.5 POST S-LOC

CODE	CUFF	D °
SH251	1	0°
SH252	2	0°
SH253	3	0°
SH254	4	0°
SH255	5	0°
SH256	6	0°
SH251515	1.5	15°
SH251530	3.0	15°

3.0 POST S-LOC

CODE	CUFF	D °
SH301	1	0°
SH302	2	0°
SH303	3	0°
SH304	4	0°
SH305	5	0°
SH306	6	0°
SH301515	1.5	15°
SH301530	3.0	15°

IMPLANT ANALOG

CODE	POST
80-02-20	2.0
80-02-25	2.5
80-02-30	3.0

IMPRESSION POST

CODE	POST
80-01-20	2.0
80-01-25	2.5
80-01-30	3.0

PLASTIC CAP FOR IMPRESSION POST

CODE	POST
81-03-20	2.0
81-03-25	2.5
81-03-30	3.0

2.0 POST PLASTIC HEALING CAP

CODE	PL	W x H
P - 240 - 104	4.0	4.0 x 10
P - 250 - 104	4.0	5.0 x 10

CODE	PL	W x H
P - 240 - 102	3.2	4.0 x 10
P - 250 - 102	3.2	5.0 x 10

CODE	PL	W x H
P - 240 - 105	5.0	4.0 x 10
P - 250 - 105	5.0	5.0 x 10

2.5 POST PLASTIC HEALING CAP

CODE	PL	W x H
P - 540 - 104	4.0	4.0 x 10
P - 550 - 104	4.0	5.0 x 10

CODE	PL	W x H
P - 540 - 102	3.2	4.0 x 10
P - 550 - 102	3.2	5.0 x 10

CODE	PL	W x H
P - 540 - 105	5.0	4.0 x 10
P - 550 - 105	5.0	5.0 x 10

3.0 POST PLASTIC HEALING CAP

CODE	PL	W x H
P - 340 - 104	4.0	4.0 x 10
P - 350 - 104	4.0	5.0 x 10
P - 365 - 104	4.0	6.5 x 10

CODE	PL	W x H
P - 340 - 102	3.2	4.0 x 10
P - 350 - 102	3.2	5.0 x 10
P - 365 - 102	3.2	6.5 x 10

CODE	PL	W x H
P - 340 - 105	5.0	4.0 x 10
P - 350 - 105	5.0	5.0 x 10
P - 365 - 105	5.0	6.5 x 10

Material : Acetal.

Characteristics : Temporary Abutment to from the soft tissue contour.

2.0 POST METAL HEALING CAP

CODE	PL	W x H
BT - 230 - 450	4.0	3.0 x 4.5
BT - 230 - 650	4.0	3.0 x 6.5
BT - 235 - 450	4.0	3.5 x 4.5
BT - 235 - 650	4.0	3.5 x 6.5
BT - 240 - 450	4.0	4.0 x 4.5
BT - 240 - 650	4.0	4.0 x 6.5
BT - 250 - 450	4.0	5.0 x 4.5
BT - 250 - 650	4.0	5.0 x 6.5

CODE	PL	W x H
BT-240-555	5.0	4.0 x 5.5

CODE	PL	W x H
BT-240-556	6.0	4.0 x 5.5

2.5 POST METAL HEALING CAP

CODE	PL	W x H
BT - 535 - 450	4.0	3.5 x 4.5
BT - 535 - 650	4.0	3.5 x 6.5
BT - 540 - 450	4.0	4.0 x 4.5
BT - 540 - 650	4.0	4.0 x 6.5
BT - 550 - 450	4.0	5.0 x 4.5
BT - 550 - 650	4.0	5.0 x 6.5

CODE	PL	W x H
BT-550-555	5.0	5.0 x 5.5

CODE	PL	W x H
BT-550-556	6.0	5.0 x 5.5

3.0 POST METAL HEALING CAP

CODE	PL	W x H
BT - 340 - 450	4.0	4.0 x 4.5
BT - 340 - 650	4.0	4.0 x 6.5
BT - 350 - 450	4.0	5.0 x 4.5
BT - 350 - 650	4.0	5.0 x 6.5
BT - 365 - 450	4.0	6.5 x 4.5
BT - 365 - 650	4.0	6.5 x 6.5

CODE	PL	W x H
BT-350-555	5.0	5.0 x 5.5

CODE	PL	W x H
BT-350-556	6.0	5.0 x 5.5

Material : Titanium Alloy (Tİ-6AI-4V, ASTM F136).

Characteristics : Temporary Abutment to form the soft tissue contour.

CUFF FOR NON SHOULDERED ABUTMENT

CODE	WIDTH
80-03-40	4.0
80-03-50	5.0
80-03-65	6.0

PLASTIC HEALING PLUG

CODE	POST
80-00-20	2.0
80-00-25	2.5
80-00-30	3.0

ABUTMENT TRANSFER DIES

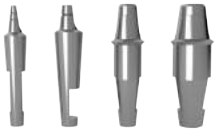

CODE	WxH
80 - 05 - 3565	3.5 x 6.5
80 - 05 - 4050	4.0 x 5.0
80 - 05 - 4065	4.0 x 6.5
80 - 05 - 5050	5.0 x 5.0
80 - 05 - 5065	5.0 x 6.5
80 - 05 - 6550	6.5 x 5.0
80 - 05 - 6565	6.5 x 6.5

SLEEVE FOR SHOULDERED ABUTMENT

CODE	WxH
80 - 04 - 40S	4.0
80 - 04 - 50S	5.0
80 - 04 - 65S	6.5
80 - 04 - 40T	4.0
80 - 04 - 50T	5.0
80 - 04 - 65T	6.5

1.5° LOCKING TAPER

INDEX

Non Screw

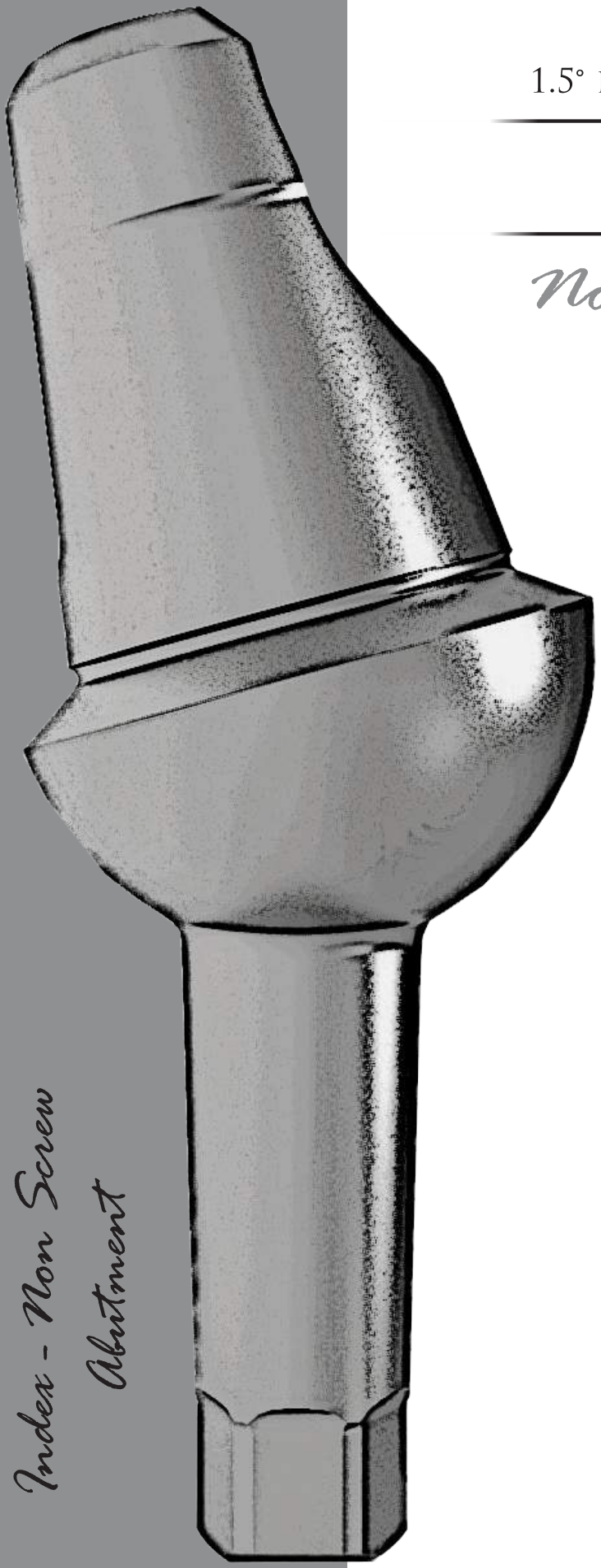

Index - Non Screw Abutment

Index Prosthetic Options

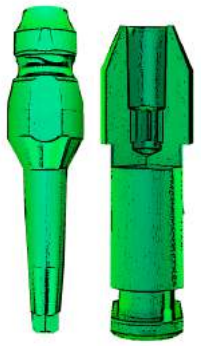

3.0 WELL

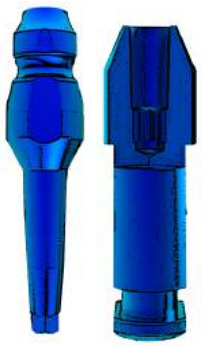

2.5 WELL

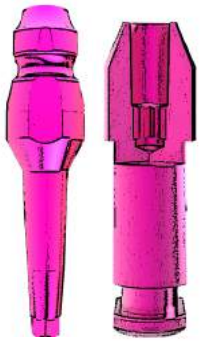

2.0 WELL

2.0 POST SHOULDERED ABUTMENT (INDEX)

unit (mm)

CODE	PL	D °	W x H
H-235 - 650S	4.0	0 °	3.5 x 6.5
H-240 - 500S	4.0	0 °	4.0 x 5.0
H-240 - 650S	4.0	0 °	4.0 x 6.5
H-250 - 500S	4.0	0 °	5.0 x 5.0
H-250 - 650S	4.0	0 °	5.0 x 6.5

CODE	PL	D °	W x H
H-235 - 651S	4.0	15°	3.5 x 6.5
H-240 - 501S	4.0	15°	4.0 x 5.0
H-240 - 651S	4.0	15°	4.0 x 6.5
H-250 - 501S	4.0	15°	5.0 x 5.0
H-250 - 651S	4.0	15°	5.0 x 6.5

CODE	PL	D °	W x H
H-240 - 6502S	3.2	0 °	4.0 x 6.5
H-250 - 6502S	3.2	0 °	5.0 x 6.5

CODE	PL	D °	W x H
H-240 - 6512S	3.2	15°	4.0 x 6.5
H-250 - 6512S	3.2	15°	5.0 x 6.5

CODE	PL	D °	W x H
H-235 - 6505S	5.0	0 °	3.5 x 6.5
H-240 - 6505S	5.0	0 °	4.0 x 6.5
H-250 - 5005S	5.0	0 °	5.0 x 5.0
H-250 - 6505S	5.0	0 °	5.0 x 6.5

CODE	PL	D °	W x H
H-235 - 6515S	5.0	15°	3.5 x 6.5
H-240 - 6515S	5.0	15°	4.0 x 6.5
H-250 - 5015S	5.0	15°	5.0 x 5.0
H-250 - 6515S	5.0	15°	5.0 x 6.5

CODE	PL	D °	W x H
H-240 - 6506S	6.0	0 °	4.0 x 6.5
H-250 - 6506S	6.0	0 °	5.0 x 6.5

CODE	PL	D °	W x H
H-240 - 6516S	6.0	15°	4.0 x 6.5
H-250 - 6516S	6.0	15°	5.0 x 6.5

Material : Titanium Alloy (Ti-6Al-4V,ASTM F136).

Characteristics : Index - Non screw.

2.0 POST NON-SHOULDERED ABUTMENT (INDEX)

unit (mm)

CODE	PL	D °	W x H
H-230 - 650	4.0	0 °	3.0 x 6.5
H-235 - 650	4.0	0 °	3.5 x 6.5
H-240 - 650	4.0	0 °	4.0 x 6.5
H-240 - 800	4.0	0 °	4.0 x 8.0
H-240 - 100	4.0	0 °	4.0 x 10
H-250 - 500	4.0	0 °	5.0 x 5.0
H-250 - 650	4.0	0 °	5.0 x 6.5
H-250 - 800	4.0	0 °	5.0 x 8.0
H-250 - 100	4.0	0 °	5.0 x 10
H-265 - 650	4.0	0 °	6.5 x 6.5
H-265 - 800	4.0	0 °	6.5 x 8.0

CODE	PL	D °	W x H
H-230 - 651	4.0	15°	3.0 x 6.5
H-235 - 651	4.0	15°	3.5 x 6.5
H-240 - 651	4.0	15°	4.0 x 6.5
H-240 - 801	4.0	15°	4.0 x 8.0
H-240 - 101	4.0	15°	4.0 x 10
H-250 - 651	4.0	15°	5.0 x 6.5
H-250 - 801	4.0	15°	5.0 x 8.0
H-250 - 101	4.0	15°	5.0 x 10
H-265 - 651	4.0	15°	6.5 x 6.5
H-265 - 801	4.0	15°	6.5 x 8.0

CODE	PL	D °	W x H
H-230 - 652	4.0	25°	3.0 x 6.5
H-240 - 652	4.0	25°	4.0 x 6.5
H-250 - 652	4.0	25°	5.0 x 6.5

CODE	PL	D °	W x H
H-240 - 6502	3.2	0 °	4.0 x 6.5

CODE	PL	D °	W x H
H-240- 6512	3.2	15°	4.0 x 6.5

CODE	PL	D °	W x H
H-240- 6505	5.0	0 °	4.0 x 6.5
H-250 - 6505	5.0	0 °	5.0 x 6.5

CODE	PL	D °	W x H
H-240 - 6515	5.0	15°	4.0 x 6.5
H-240 - 1015	5.0	15°	4.0 x 10
H-250 - 6515	5.0	15°	5.0 x 6.5

CODE	PL	D °	W x H
H-250- 6506	6.0	0 °	5.0 x 6.5

CODE	PL	D °	W x H
H-250- 6516	6.0	15°	5.0 x 6.5

Material : Titanium Alloy (Ti-6Al-4V,ASTM F136).
Characteristics : Index - Non screw.

2.5 POST SHOULDERED ABUTMENT (INDEX)

unit (mm)

CODE	PL	D °	W x H
H-540 - 650S	4.0	0 °	4.0 x 6.5
H-540 - 100S	4.0	0 °	4.0 x 10
H-550 - 650S	4.0	0 °	5.0 x 6.5

CODE	PL	D °	W x H
H-540 - 651S	4.0	15°	4.0 x 6.5
H-540 - 801S	4.0	15°	4.0 x 8.0
H-550 - 651S	4.0	15°	5.0 x 6.5

CODE	PL	D °	W x H
H-550-6502S	3.2	0°	5.0 x 6.5

CODE	PL	D °	W x H
H-550-652S	4.0	25°	5.0 x 6.5
H-550-6512S	3.2	15°	5.0 x 6.5

CODE	PL	D °	W x H
H-540 - 6505S	5.0	0 °	4.0 x 6.5
H-540 - 1005S	5.0	0 °	4.0 x 10
H-550 - 6505S	5.0	0 °	5.0 x 6.5

CODE	PL	D °	W x H
H-540 - 6515S	5.0	15°	4.0 x 6.5
H-540 - 8015S	5.0	15°	4.0 x 8.0
H-550 - 6515S	5.0	15°	5.0 x 6.5

CODE	PL	D °	W x H
H-540 - 6506S	6.0	0 °	4.0 x 6.5
H-540 - 1006S	6.0	0 °	4.0 x 10
H-550 - 6506S	6.0	0 °	5.0 x 6.5

CODE	PL	D °	W x H
H-540 - 6516S	6.0	15°	4.0 x 6.5
H-540 - 8016S	6.0	15°	4.0 x 8.0
H-550 - 6516S	6.0	15°	5.0 x 6.5

Material : Titanium Alloy (Ti-6Al-4V,ASTM F136).
Characteristics : Index - Non screw.

2.5 POST NON-SHOULDERED ABUTMENT (INDEX)

unit (mm)

CODE	PL	D °	W x H
H-540 - 650	4.0	0 °	4.0 x 6.5
H-540 - 100	4.0	0 °	4.0 x 10
H-550 - 650	4.0	0 °	5.0 x 6.5

CODE	PL	D °	W x H
H-540 - 651	4.0	15°	4.0 x 6.5
H-540 - 101	4.0	15°	4.0 x 10
H-550 - 651	4.0	15°	5.0 x 6.5

CODE	PL	D °	W x H
H-550-6502	3.2	0°	5.0 x 6.5

CODE	PL	D °	W x H
H-550-652	4.0	25°	5.0 x 6.5
H-550-6512	3.2	15°	5.0 x 6.5

CODE	PL	D °	W x H
H-540 - 6505	5.0	0 °	4.0 x 6.5
H-540 - 1005	5.0	0 °	4.0 x 10
H-550 - 6505	5.0	0 °	5.0 x 6.5

CODE	PL	D °	W x H
H-540 - 6515	5.0	15°	4.0 x 6.5
H-540 - 1015	5.0	15°	4.0 x 10
H-550 - 6515	5.0	15°	5.0 x 6.5

CODE	PL	D °	W x H
H-540 - 6506	6.0	0 °	4.0 x 6.5
H-540 - 1006	6.0	0 °	4.0 x 10
H-550 - 6506	6.0	0 °	5.0 x 6.5

CODE	PL	D °	W x H
H-540 - 6516	6.0	15°	4.0 x 6.5
H-540 - 1016	6.0	15°	4.0 x 10
H-550 - 6516	6.0	15°	5.0 x 6.5

Material : Titanium Alloy (Ti-6Al-4V,ASTM F136).
Characteristics : Index - Non screw.

3.0 POST SHOULDERED ABUTMENT (INDEX)

unit (mm)

CODE	PL	D °	W x H
H-340 - 500S	4.0	0 °	4.0 x 5.0
H-340 - 650S	4.0	0 °	4.0 x 6.5
H-350 - 500S	4.0	0 °	5.0 x 5.0
H-350 - 650S	4.0	0 °	5.0 x 6.5
H-365- 500S	4.0	0 °	6.5 x 5.0
H-365- 650S	4.0	0 °	6.5 x 6.5

CODE	PL	D °	W x H
H-340 - 501S	4.0	15°	4.0 x 5.0
H-340 - 651S	4.0	15°	4.0 x 6.5
H-350 - 501S	4.0	15°	5.0 x 5.0
H-350 - 651S	4.0	15°	5.0 x 6.5
H-365- 501S	4.0	15°	6.5 x 5.0
H-365- 651S	4.0	15°	6.5 x 6.5

CODE	PL	D °	W x H
H-340 - 6502S	3.2	0 °	4.0 x 6.5
H-350 - 6502S	3.2	0 °	5.0 x 6.5
H-365 - 6502S	3.2	0 °	6.5 x 6.5

CODE	PL	D °	W x H
H-340 - 6512S	3.2	15°	4.0 x 6.5
H-350 - 6512S	3.2	15°	5.0 x 6.5
H-365 - 6512S	3.2	15°	6.5 x 6.5

CODE	PL	D °	W x H
H-340 - 6505S	5.0	0 °	4.0 x 6.5
H-350 - 6505S	5.0	0 °	5.0 x 6.5
H-365- 5005S	5.0	0 °	6.5 x 5.0
H-365- 6505S	5.0	0 °	6.5 x 6.5

CODE	PL	D °	W x H
H-340 - 6515S	5.0	15°	4.0 x 6.5
H-350 - 6515S	5.0	15°	5.0 x 6.5
H-365- 5015S	5.0	15°	6.5 x 5.0
H-365- 6515S	5.0	15°	6.5 x 6.5

CODE	PL	D °	W x H
H-350 - 6506S	6.0	0 °	5.0 x 6.5
H-365- 6506S	6.0	0 °	6.5 x 6.5

CODE	PL	D °	W x H
H-350 - 6516S	6.0	15°	5.0 x 6.5
H-365- 6516S	6.0	15°	6.5 x 6.5

CODE	PL	D °	W x H
H-350 - 6507S	7.0	0 °	5.0 x 6.5

CODE	PL	D °	W x H
H-350 - 6517S	7.0	15°	5.0 x 6.5

Material : Titanium Alloy (Ti-6Al-4V,ASTM F136).
Characteristics : Index - Non screw.

3.0 POST NON-SHOULDERED ABUTMENT (INDEX)

unit (mm)

CODE	PL	D °	W x H
H-340 - 650	4.0	0 °	4.0 x 6.5
H-350 - 500	4.0	0 °	5.0 x 5.0
H-350 - 650	4.0	0 °	5.0 x 6.5
H-350 - 800	4.0	0 °	5.0 x 8.0
H-365 - 500	4.0	0 °	6.5 x 5.0
H-365 - 650	4.0	0 °	6.5 x 6.5
H-365 - 800	4.0	0 °	6.5 x 8.0
H-375 - 800	4.0	0 °	7.5 x 8.0

CODE	PL	D °	W x H
H-340 - 651	4.0	15°	4.0 x 6.5
H-350 - 651	4.0	15°	5.0 x 6.5
H-350 - 801	4.0	15°	5.0 x 8.0
H-365 - 651	4.0	15°	6.5 x 6.5
H-365 - 801	4.0	15°	6.5 x 8.0
H-375 - 801	4.0	15°	7.5 x 8.0

CODE	PL	D °	W x H
H-350 - 652	4.0	25°	5.0 x 6.5

CODE	PL	D °	W x H
H-350 - 6502	3.2	0 °	5.0 x 6.5
H-365- 6502	3.2	0 °	6.5 x 6.5

CODE	PL	D °	W x H
H-350 - 6512	3.2	15°	5.0 x 6.5
H-365 - 6512	3.2	15°	6.5 x 6.5

CODE	PL	D °	W x H
H-350 - 5005	5.0	0 °	5.0 x 5.0
H-350 - 6505	5.0	0 °	5.0 x 6.5
H-365 - 5005	5.0	0 °	6.5 x 5.0
H-365 - 6505	5.0	0 °	6.5 x 6.5

CODE	PL	D °	W x H
H-350 - 6515	5.0	15°	5.0 x 6.5
H-350 - 8015	5.0	15°	5.0 x 8.0
H-365 - 6515	5.0	15°	6.5 x 6.5

CODE	PL	D °	W x H
H-350 - 6506	6.0	0 °	5.0 x 6.5
H-365- 6506	6.0	0 °	6.5 x 6.5

CODE	PL	D °	W x H
H-350 - 6516	6.0	15°	5.0 x 6.5
H-365- 6516	6.0	15°	6.5 x 6.5

CODE	PL	D °	W x H
H-350 - 6507	7.0	0 °	5.0 x 6.5
H-365 - 6507	7.0	0 °	6.5 x 6.5

CODE	PL	D °	W x H
H-350 - 6517	7.0	15°	5.0 x 6.5
H-365 - 6517	7.0	15°	6.5 x 6.5

Material : Titanium Alloy (Ti-6Al-4V, ASTM F136).
Characteristics : Index - Non Screw

2.0 T-BASE ABUTMENT (INDEX)

unit (mm)

CODE	POST	PL
H-TB203	2.0	3.2
H-TB204	2.0	4.0

Material : Titanium Alloy
(Ti-6Al-4V, ASTM F136).
Characteristics : Index - Non Screw

2.5 T-BASE ABUTMENT (INDEX)

CODE	POST	PL
H-TB503	2.5	3.2
H-TB504	2.5	4.0

Material : Titanium Alloy
(Ti-6Al-4V, ASTM F136).
Characteristics : Index - Non Screw

3.0 T-BASE ABUTMENT (INDEX)

CODE	POST	PL
H-TB303	3.0	3.2
H-TB304	3.0	4.0

Material : Titanium Alloy
(Ti-6Al-4V, ASTM F136).
Characteristics : Index - Non Screw

FIXED DETACHABLE ABUTMENT (INDEX)

unit (mm)

CODE	POST	PL	D °
H-FD230	2.0	3.2	0°
H- FD240	2.0	4.0	0°
H- FD250	2.0	5.0	0°

CODE	POST	PL	D °
H- FD530	2.5	3.2	0°
H- FD540	2.5	4.0	0°
H- FD550	2.5	5.0	0°

CODE	POST	PL	D °
H- FD330	3.0	3.2	0°
H- FD340	3.0	4.0	0°
H- FD350	3.0	5.0	0°

CODE	POST	PL	D °
H- FD231	2.0	3.2	15°
H- FD241	2.0	4.0	15°
H- FD251	2.0	5.0	15°

CODE	POST	PL	D °
H- FD531	2.5	3.2	15°
H- FD541	2.5	4.0	15°
H- FD551	2.5	5.0	15°

CODE	POST	PL	D °
H- FD331	3.0	3.2	15°
H- FD341	3.0	4.0	15°
H- FD351	3.0	5.0	15°

Material : Titanium Alloy (Ti-6Al-4V,ASTM F136).
Characteristics : Index - Non screw.

FIXED DETACHABLE - Cover Screw

CODE
H- 80-06-01

FIXED DETACHABLE - Analog

CODE
H- 80-06-02

FIXED DETACHABLE Transfer and Castable Cop.

CODE
H- 80-06-04

FIXED DETACHABLE Transfer Coping + Retention Screw

CODE
H- 80-06-03
H- 80-06-06

FIXED DETACHABLE - Coping Screw

CODE	LENGHT
H- 80-06-05	5mm
H- 80-06-10	10 mm

IMPLANT ANALOG

CODE	POST
80-02-20	2.0
80-02-25	2.5
80-02-30	3.0

IMPRESSION POST (INDEX)

CODE	POST
H-80-01-20	2.0
H-80-01-25	2.5
H-80-01-30	3.0

Index Prosthetic Options

Hybrid Surgical Kit

Ø 2.0 DRIVER

CODE	CODE
HYB-0-8-01	HYB-0-8-02

PILOT DRILLS (STOPPER DRILLS)

CODE	DIAMETER
HYB-0-2-01	Ø 2.0 x 8
HYB-0-2-02	Ø 2.0 x 10
HYB-0-2-03	Ø 2.0 x 12
HYB-0-2-04	Ø 2.0 x 14
HYB-0-2-05	Ø 2.0 x 16

Ø 3.0 DRIVER

CODE	CODE
HYB-0-7-01	HYB-0-7-02

TORQUE RATCHET

CODE
HYB-0-11-01

PLUG REMOVAL

CODE
HYB-0-6-01

DRILL EXT.

CODE
HYB-0-5-01
HYB-0-5-02

PARALLEL PIN

CODE	ANGLE
HYB-0-10-01	0°
HYB-0-10-02	15°

TAP DRILL

CODE	DIAMETER
HYB-0-4-01	3.0
HYB-0-4-02	3.5
HYB-0-4-03	4.0
HYB-0-4-04	4.5
HYB-0-4-05	5.0

ASR REAMER

CODE	DIAMETER
HYB-0-3-01	2.5
HYB-0-3-02	3.0
HYB-0-3-03	3.5
HYB-0-3-04	4.0
HYB-0-3-05	4.5
HYB-0-3-06	5.0

LANCE DRILL

CODE
HYB-0-1-01

GUIDE PIN

CODE
HYB-0-9-01

EC REP
AZ & PARTNER AG
Dorichärn CH-6243 Egolzwil , SWITZERLAND
Tel: +41 41 982 02 02 Fax: +41 41 982 03 03
www.hybriddentalimplant.com - info@hybriddentalimplant.com
NTA İmplant Ltd.
İsmetpaşa Cad. 43-3 Antalya / TURKEY
Tel: +90 242 248 19 96 Fax: +90 242 244 02 14